Flat Ring Light

LR-F60/32□

□には発光色

ＷＨ＝白，Ｂ＝青，Ｇ＝緑 が入ります

Details of Connector

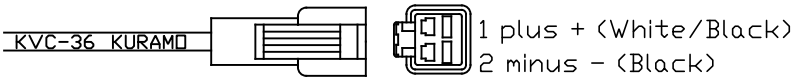

	Light	Power Supply
Connector	SMR-02V-B	SMP-02V-BC
Contact	BYM-001T-0.6	BHF-001T-0.8SS
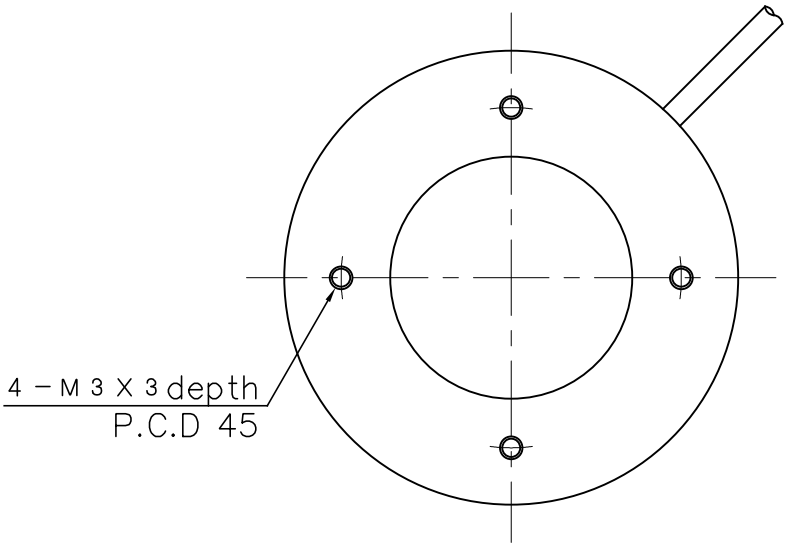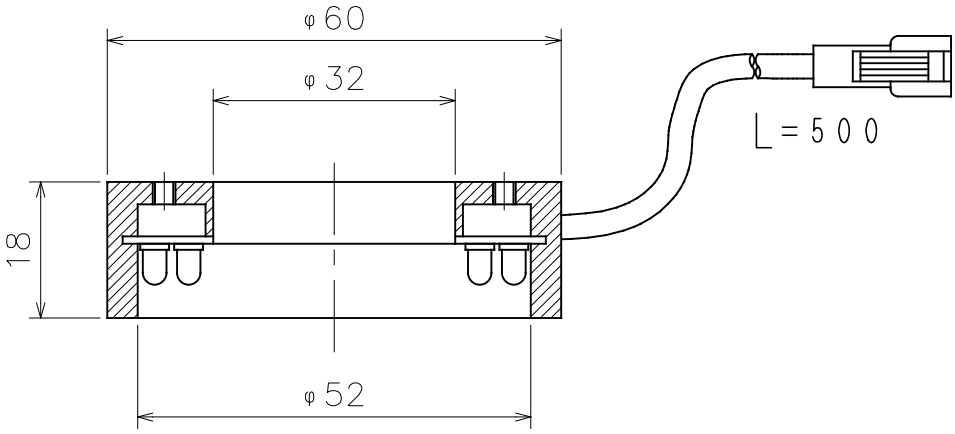
* 60 LEDs
* □nly 12V USE
* Electric Power Consumption 3.6W